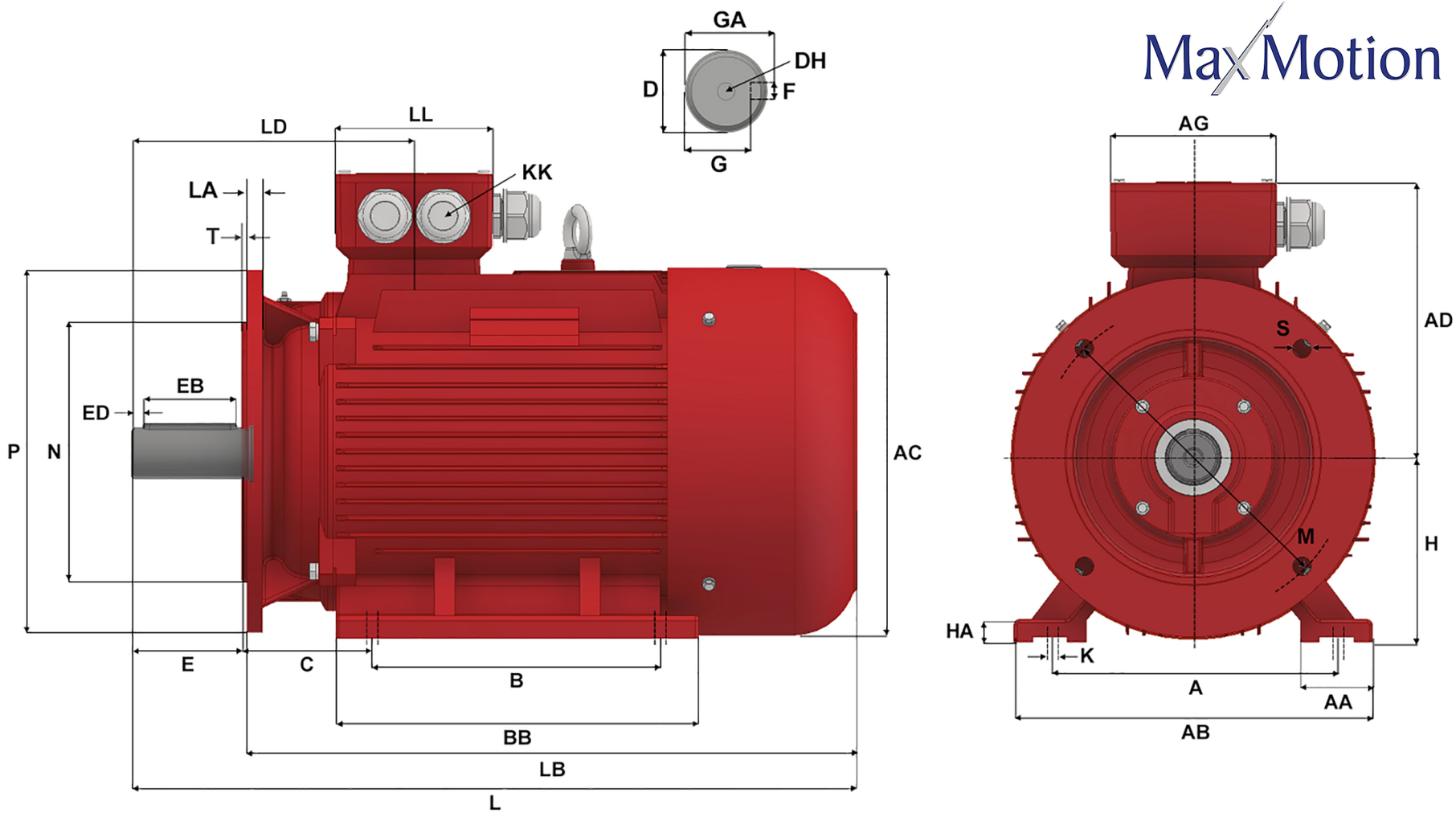

Version: 1JLEM			Revised: 09-11-2019			HP	RPM	FRAME	ENCLOSURE	IJC200L-4-B35		
Customer is responsible in determining that Max Motion product will fit/perform suitably in the intended application						40	1775	200L	TEFC			
A	B	C	D	E	F	G	H	K	L	M	N	P
318	305	133	55	110	16	49	200	4 - Ø 18.5	746	350	300	400
S	T	AA	AB	AC	AD	AG	BA	BB	DH	EB	ED	GA
18.5	5	70	388	400	304	210	0	369	M20 X 42	100	5	59
HA	KK (1)	KK (2)	KK (3)	LA	LB	LD	LL					
25	M50 X 1.5	1.5" NPT	M16 X 1.5	17	636	296	190					